Finnpipette® Novus Multichannel

Instructions for Use
Bedienungsanleitung
Guide d´utilisation
Instruccions de uso
取扱説明書

Analyze • Detect • Measure • Control™

Thermo
ELECTRON CORPORATION

WEEE Compliance:

This product is required to comply with the European Union's Waste Electrical & Electronic Equipment (WEEE) Directive 2002/96/EC . It is marked with the following symbol:

Thermo Electron has contracted with one or more recycling/disposal companies in each EU Member State, and this product should be disposed of or recycled through them. Further information on Thermo Electron's compliance with these Directives, the recyclers in your country, and information on Thermo Electron products which may assist the detection of substances subject to the RoHS Directive are available at **www.thermo.com/WEEERoHS**

English

CONTENTS

Deutsch

INHALT

Français

SOMMAIRE

Español

CONTENIDO

日本語

目次

Product description

The different models of Finnpipette Novus pipettes cover a volume range from 1 µl to 1200 µl.

Order No.	Channel	Volume Range				Finntip
4630000X	8	1	µl	to	10 µl	10
4630010X	12	1	µl	to	10 µl	10
4630020X	8	5	µl	to	50 µl	250 Universal, 200 Ext
4630030X	12	5	µl	to	50 µl	250 Universal, 200 Ext
4630040X	8	30	µl	to	300 µl	300, Flex 300
4630050X	12	30	µl	to	300 µl	300, Flex 300
4630070X	16	5	µl	to	50 µl	50
4630080X	8	100	µl	to	1200 µl	Flex 1200

X: 0=Eur. 1=US 2=Jap. 3=UK 4=Australia

The Finnpipette Novus is an electronically assisted pipette for a wide range of liquid handling operations. Thanks to the electronic motor and electronic control, pipetting is easy and comfortable, yet still fast and accurate. It operates on the air displacement principle (i.e. an air interface) and uses detachable, disposable tips, which are easy to remove with a soft touch tip ejector.

The adjustable, index finger operated pipetting trigger uses natural hand movement, increasing comfort and reducing the risk of repetitive stress injuries. The Finnpipette Novus provides many functions which are very practical for daily use in laboratory work, such as forward-, reverse- and repetitive pipetting, stepper and diluting modes.

The guiding and easy user-interface is very fast to learn. The adjusted delivery volume is clearly indicated in the LCD display on top of the handle. The long lasting Lithium-Ion -battery is always charged with rapid charge technique. If needed, the battery can be charged over the lunch hour.

Raw materials

The Finnpipette Novus is made of mechanically durable and chemically resistant materials. The tip cone modules can be repeatedly autoclaved at 121°C. **Note:** The 1200 µl module is NOT autoclavable.

Description of tips

Finntips are recommended for use with the Finnpipette Novus**.**
They are made of natural colour polypropylene, generally regarded as the only contamination free material suitable for tips. Finntips are also autoclavable (121°C).

Package

The complete Finnpipette Novus package contains:

1. Finnpipette Novus
2. Charger
3. Self hanger
4. instructions for use
5. sample Finntips
6. Piston removal tool

Getting started

Remove the content from the package and verify that all items listed above are included. Inspect for possible shipping damage. Make sure that the pipette is desired volume range and that the voltage of the charger is correct.

Charging the battery

Warning: Use only the original Finnpipette Novus charger and battery pack.
The pipette battery may be empty when delivered and must be charged before initial use. Connect the lead of charger to the socket on the back of pipette. Then connect the charger to an AC wall socket. If the battery is completely empty, it may take a few minutes before the pipette will turn on. You can use the pipette while the charger is connected. The charging time is typically less than one hour. An indicator in the LCD display shows the charge level of the battery. When the indicator shows empty battery, pipetting is no more possible, and the pipette has to be charged again.

Adjusting the trigger position

The index finger operated trigger, which activates the piston movement, can be adjusted by rotating it 60 degrees to both directions of the center position. Usually right handed operators turn it left (counter clockwise) to get the best possible position for the thumb to eject the tip. See picture on page 5.

Tip ejection

To help eliminate the risk of contamination, each pipette is fitted with a tip ejector system. The tip ejector system consists of a soft-touch tip ejector and specially designed gearing mechanism. To release the tips, point the pipette at suitable waste receptacle and press the tip ejector with your thumb.

Shelf hanger

You can attach the pipette shelf hanger on a counter, pipette stand or anywhere where you want to hang your pipette. Clean the area where you plan to attach the shelf hanger. Apply two stickers to the underside of the shelf hanger. Press the shelf hanger firmly into place — on a shelf, countertop or pipette stand. To use, hang the grippy finger rest on the shelf hanger.

Pipette operation

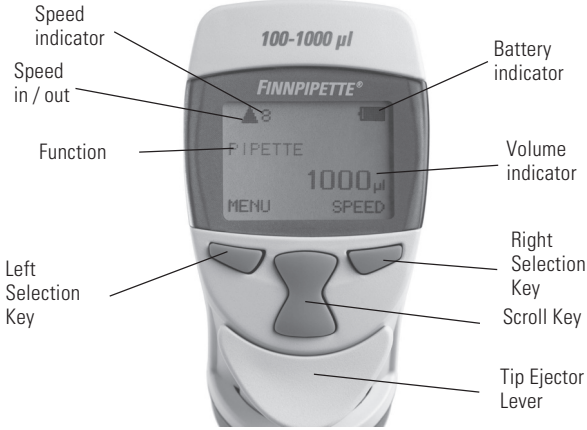

Choosing pipetting functions and speed

To choose the pipetting function press *Menu (*left selection key). Scroll the function list and select the desired function with *OK* (right selection key). In most cases the volume can be selected simply by pressing the scroll key up or down. Accept the volume with *OK*. In some cases the initial piston position has to be changed and a text PRESS TRIGGER appears on display. Press the trigger to move the piston to the new initial position.

Pipetting speeds can be selected with the right selection key whenever the text *SPEED* is displayed. Press *SPEED* and the speed in starts to blink. Select the speed with scroll key and accept with *OK*. Now the speed out starts to blink. Select the speed with scroll key and accept with *OK*.

The Menu Map

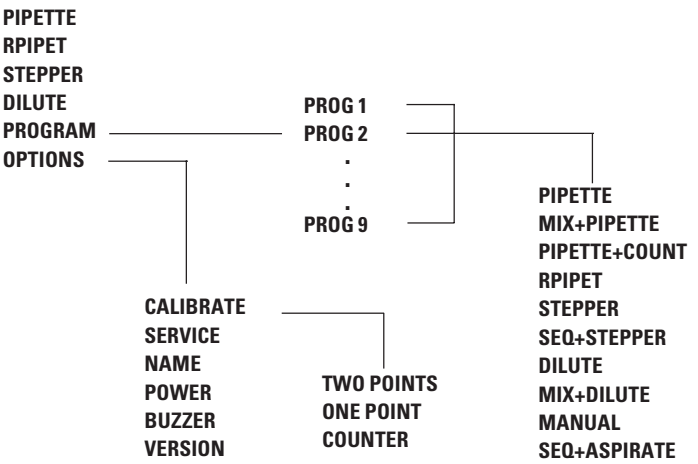

Pipette (Forward technique)

Choose the PIPETTE function as described above.
Select the pipetting volume simply by pressing the scroll key up or down. Accept the volume with *OK*. Optionally press *SPEED* and the speed in starts to blink. Select the speed with scroll key and accept with *OK*. Select the speed out with scroll key and accept with *OK*.

1. Dip the tip under the surface of the liquid in the reservoir and press the trigger. The liquid is drawn in to the tip.
2. Wait until the liquid is not moving in the tip and withdraw the tip from the liquid touching it against the edge of the reservoir to remove excess liquid.
3. To deliver the liquid press the trigger and hold it down. The blow-out is also included to empty the tip.
4. Release the trigger to return to the ready position.

If necessary, change the tip and continue pipetting.

Rpipet (Reverse & Repetitive)

With RPIPET function both reverse and repetitive techniques are possible.
Choose the RPIPET function as described above.
Select the pipetting volume simply by pressing the scroll key up or down. Accept the volume with *OK*. Press *SPEED* and the speed in starts to blink. Select the speed with scroll key and accept with *OK*. Select the speed out with scroll key and accept with *OK*.

Reverse technique

The reverse technique is suitable for dispensing liquids that have a high viscosity or a tendency to foam easily. The technique is also recommended for dispensing very small volumes.
Fill a clean reagent reservoir with the liquid to be dispensed.

1. Dip the tip under the surface of the liquid in the reservoir and press the trigger. This action will fill the tip.
2. Withdraw the tip from the liquid touching it against the edge of the reservoir to remove excess liquid.
3. Deliver the preset volume by **shortly pressing the trigger**. Some liquid will remain in the tip and this should not be included in the delivery. A text BLOWOUT is displayed.
4. To empty the tip, press trigger again.

If necessary, change the tip and continue pipetting.

Repetitive technique

The repetitive technique offers a rapid and simple procedure for repeated delivery of the same volume. Fill a clean reagent reservoir with the liquid to be dispensed.

1. Dip the tip under the surface of the liquid in the reservoir and press the trigger. This action will fill the tip.
2. Withdraw the tip from the liquid touching it against the edge of the reservoir to remove excess liquid.
3. Deliver the preset volume by **pressing and holding the trigger down**.
   Some liquid will remain in the tip and this should not be included in the delivery.
4. Dip the tip again to reagent reservoir and release the trigger. This action will fill the tip again.
5. Continue pipetting by repeating steps 3 and 4.
6. To empty the tip completely, dispense by **shortly** pressing the trigger.
   Some liquid will remain in the tip and this should not be included in the delivery. A text BLOWOUT is displayed.
7. To empty the tip completely, press trigger again.

If necessary, change the tip and continue pipetting.

Stepper (multi dispensing)

With STEPPER function repeated dispensing of selected volume is possible.
Choose the STEPPER function as described above.
Select the pipetting volume simply by pressing the scroll key up or down. The display shows always the maximum number of steps during volume selection. Accept the volume with *OK*. Next choose the number of steps with scroll key and accept with *OK*.

Optionally select the speed. Press *SPEED* and the speed in starts to blink. Select the speed with scroll key and accept with *OK*. Select the speed out with scroll key and accept with *OK*.

Fill a clean reagent reservoir with the liquid to be dispensed.

1. Dip the tip under the surface of the liquid in the reservoir and press the trigger. This action will fill the tip.
2. Withdraw the tip from the liquid touching it against the edge of the reservoir to remove excess liquid.
3. Deliver the preset volume by pressing the trigger. The display shows the number of steps left.
4. Continue dispensing by repeating step 3. After last step a text BLOWOUT is displayed.
5. To empty the tip completely, press trigger and hold it down.
6. Release the trigger.

If necessary, change the tip and continue pipetting.

Note: The pipette can be emptied at any time by pressing CANCEL (left selection key)

Dilute

With DILUTE function dispensing of two selected volume is possible.
Choose the DILUTE function as described above. First volume (VOL 1) is shown on display.

Select the pipetting first volume simply by pressing the scroll key up or down. Accept the volume with *OK*. Next select the second volume (VOL 2) with scroll key and accept with *OK*.

Optionally select the speed. Press *SPEED* and the speed in starts to blink. Select the speed with scroll key and accept with *OK*. Select the speed out with scroll key and accept with *OK*.

1. Dip the tip under the surface of the first liquid in the reservoir and press the trigger. The first volume is drawn in to the tip. A text AIR appears on display.
2. Withdraw the tip from the liquid touching it against the edge of the reservoir to remove excess liquid. Press trigger again to aspirate air buffer.
3. Dip the tip under the surface of the second liquid and press the trigger. The second volume is drawn in to the tip.
4. Withdraw the tip from the liquid.
5. To deliver the both volumes, press the trigger and hold it down. The blow-out is also included to empty the tip.
6. Release the trigger to return to the ready position.

If necessary, change the tip and continue pipetting.

Program

Programs are stored settings, that can be edited, stored and retrieved. Additional functions as mixing, counter etc. are available in program mode.
To retrieve a program, choose PROGRAM from menu as described above. The display shows the first program (PROG1). Select the desired program with scroll key and accept with OK.
If you want to change the settings, press EDIT. Select the function with scroll key and accept with OK. Note that there are additional functions available compared to main menu. After selecting the function, set the volumes, speeds etc. as described in the function instruction above.
When working with programs, the scroll key selects the program and it is a very fast way to switch between different settings.

Additional functions in program mode

Mix + Pipette

This function adds automatic mixing after normal pipetting. First select the desired volume with scroll key and accept with OK. Then select pipetting speeds accordingly. After dispensing the volume a text MIX appears on display. By pressing trigger the pipette starts to pipette ca. 70 % of the selected volume several times as long as the trigger is held pressed. After releasing the trigger the pipettes stops after next dispensing and a text BLOWOUT appears to display. A normal blowout function is done by pressing the trigger and pipette is again ready for next pipetting.

Pipette + Count

This function adds automatic count number to pipetting. First select the desired volume with scroll key and accept with OK. Then select pipetting speeds accordingly. Next choose the max. number of pipettings, the default value is 999. After the max. number of pipettings is reached, the counter returns to zero. The counter can be reset at any time to zero by pressing SCROLL DOWN ; OK ; SCROLL UP ; OK.

Seq stepper

The sequential stepper mode enables serial dispensing of different volumes (in normal stepper mode only fixed volume). First choose the amount of dispensings (max. 20) with SCROLLKEY and accept with OK. Vol 1 appears to display and highest possible volume is flashing. Select the first volume with SCROLLKEY and accept with OK. Now Vol 2 appears to display and highest possible volume left is flashing. Select the second volume with SCROLLKEY and accept with OK. After selecting the last volume the total volume is shown on display and speed in is flashing. Select the pipettings speeds and the pipette is ready for pipetting.

1. Dip the tip under the surface of the liquid in the reservoir and press the trigger. This action will fill the tip and the first volume appears on the display.
2. Withdraw the tip from the liquid touching it against the edge of the reservoir to remove excess liquid.
3. Deliver the first volume by pressing the trigger. The display shows the next volume.
4. Continue dispensing by repeating step 3. After last step a text BLOWOUT is displayed.
5. To empty the tip completely, press trigger.
6. If necessary, change the tip and continue pipetting.

Note: The pipette can be emptied at any time by pressing CANCEL (left selection key)

Mix + Dilute

Select the pipetting first volume by pressing the scroll key up or down. Accept the volume with *OK*. Next select the second volume (VOL 2) with scroll key and accept with *OK*. Then select the pipetting speeds.

1. Dip the tip under the surface of the first liquid in the reservoir and press the trigger. The first volume is drawn in to the tip. A text AIR appears on display.
2. Withdraw the tip from the liquid touching it against the edge of the reservoir to remove excess liquid. Press trigger again to aspirate air buffer.
3. Dip the tip under the surface of the second liquid and press the trigger. The second volume is drawn in to the tip.
4. Withdraw the tip from the liquid.
5. To deliver the both volumes, press the trigger. Text MIX appears on the display.

6. By pressing trigger the pipette starts to pipette ca. 70 % of the total volume several times as long as the trigger is held pressed.
7. After releasing the trigger the pipette stops after next dispensing and a text BLOWOUT appears to display.
8. Withdraw the tip from the liquid and press the trigger and hold it down to empty the tip.
9. Release the trigger to return to the ready position.
10. If necessary, change the tip and continue pipetting.

Manual

With manual mode it is possible to measure volumes. In manual mode only slower speeds are available to ensure a quick stop. First select a limit for total volume, the default is the max. volume. Then select the pipetting speeds and zero volume appears to the display.

1. Dip the tip under the surface of the liquid in the reservoir and press the trigger. The liquid is drawn in to the tip and the actual volume is shown on the display.
2. The pipetting direction can be changed with IN/OUT key (Left selection key).
3. To deliver the liquid selected the down direction and press the trigger.
4. To deliver out the rest of the liquid, press the trigger and hold it down.
5. If necessary, change the tip and continue pipetting.

Note: The volume display can be reset to zero at any time by pressing RESET with right selection key.

Seq + Aspirate

The sequential aspirate mode enables serial aspirating of different volumes. First choose the number of volumes (max. 20) with SCROLLKEY and accept with OK. Vol 1 appears to display and highest possible volume is flashing. Select the first volume with SCROLLKEY and accept with OK. Now Vol 2 appears to display and highest possible volume left is flashing. Select the second volume with SCROLLKEY and accept with OK. After selecting the last volume the total volume is shown on display and speed in is flashing for selecting the pipettings speeds. After selecting the speeds the first volume is shown on the display and the pipette is ready for pipetting.

1. Dip the tip under the surface of the liquid and press the trigger. This action will take up first volume and the next volume appears on the display.
2. Withdraw the tip from the liquid touching it against the edge of the reservoir to remove excess liquid.
3. Dip the tip under the surface of the next liquid and press the trigger. This action will take up current volume and the next volume appears on the display.
4. Repeat steps 2. and 3. until last volume is drawn in to the tip. The total volume is shown on the display.
5. Deliver the total volume by pressing the trigger and hold it down. The blowout volume is included in the delivered volume.
6. Release the trigger to return to the ready position.
7. If necessary, change the tip and continue pipetting.

Note: The pipette can be emptied at any time by pressing CANCEL (left selection key)

Options

Calibrate

Calibration mode. See chapter calibration.

Service

The piston can be disconnected and reconnected in Service mode. For details see chapter Maintenance.

Name

This function enables user to set a name to the pipette. The name is always shown on the display when the pipette is in sleep mode. To change the default name choose NAME from the menu and press edit. The first digit starts to flash. Change the digit with SCROLLKEY and accept and move to next digit with OK. When the last digit is accepted the name is changed.

Power

With this function the power can be turned off. Pressing any key turns on the power.

Buzzer

The buzzer can be turned on and off with this function.

Version

The software version is displayed.

Calibration

All Finnpipettes are factory calibrated and adjusted to give the volumes as specified with distilled or deionized water. Normally, the pipettes do not need adjustment, but they are constructed to permit recalibration and adjustment for liquids of different temperature and viscosity.

Device requirements and test conditions

An analytical balance must be used. The scale graduation value of the balance should be chosen according to the selected test volume of the pipette:

Volume range	readable graduation	Precision repeatability(s) and linearity	Uncertainty of measurement
under 10 µl	0.00 1mg	0.001mg	0.002µl
10-100 µl	0.01 mg	0.02mg	0.02µl
above 100 µl	0.1 mg	0.2mg	0.2µl

If the uncertainty of measurement of the balance is known, this may be used instead of the repeatability and linearity.
Test liquid: Water, distilled or deionized, "grade 3" water conforming ISO 3696. Tests are done in a draft-free room at a constant (±0.5°C) temperature of water, pipette and air between 15°C to 30°C.
The relative humidity must be above 50%. Especially with volumes under 50µl the air humidity should be as high as possible to reduce the effect of evaporation loss. Special accessories, such as the evaporation trap, are recommended.

Calibration Counter

By selecting MENU -> OPTIONS -> CALIBRATE -> COUNTER the number of pipetttings since last calibration is shown on the display. The counter is reset to zero when calibration is performed.

Checking the calibration

The pipette is checked with the maximum volume (nominal volume) and with the minimum volume. A new tip is first pre-wetted 3-5 times and a series of ten pipettings are done with both volumes. A pipette is always adjusted for delivery (Ex) of the selected volume. Measuring volumes taken from balance is not allowed.

Procedure:

1. Do 10 pipettings with the minimum volume.
2. Do 10 pipettings with the maximum volume.
3. Calculate the accuracy (A) and precision (cv) of both series.
4. Compare the results to the limits in the Table 1.

If the calculated results are within the selected limits, the adjustment of the pipette is correct.

TABLE1: Maximum permissible errors according ISO 8655

Range	*Channel*	*Volume µl*	*Accuracy µl*	*Accuracy %*	*Precision s.d.µl*	*Precision cv%*
1-10 µl	*8, 12*	*10*	*±0.24*	*±2.4*	*0.16*	*1.6*
		1	*±0.24*	*±24*	*0.16*	*16*
5-50 µl	*8, 12, 16*	*50*	*±1.0*	*±2.0*	*0.4*	*0.8*
		5	*±1.0*	*±20*	*0.4*	*8.0*
30-300 µl	*8, 12*	*300*	*±8.0*	*±2.7*	*3.0*	*1.0*
		30	*±8.0*	*±26.7*	*3.0*	*10.0*
100-1200 µl	*8*	*1200*	*±32*	*±2.7*	*12*	*1.0*
		100	*±32*	*±32*	*12*	*12*

Adjustment

Two point calibration

Normally the two-point calibration should be used.

1. Do the pipetting series with both max. and min. volumes.
2. Calculate the actual results.
3. Press MENU and select options with SCROLLKEY and accept with OK.
4. Select CALIBRATE and press OK.
5. Select two points and confirm with OK. The target max. and target min. volumes are shown on the display.
6. Press EDIT and change the actual max. volume with the SCROLLKEY and accept with OK.
7. Change the actual min. volume with the SCROLLKEY and accept with OK.
8. A text SAVE? appears on the display.
9. Accept with YES
10. The adjustment has been changed.

One point calibration

The one point calibration can be used if a single specific volume must be calibrated. The calibration volume can be selected from the entire volume range. Note that the accuracy of other volumes changes also and the performance for other volumes cannot be assured.

1. Do the pipetting series with calibration volume.
2. Calculate the results.
3. Press MENU and select options with SCROLLKEY and accept with OK.
4. Select CALIBRATE and press OK.
5. Select one point and confirm with OK. The calibration volume is shown on the display.
6. Press EDIT and change the calibration volume with the SCROLLKEY and accept with OK.
7. Change the actual volume with the SCROLLKEY and accept with OK.
8. A text SAVE? appears on the display.
9. Accept with YES
10. The adjustment has been changed.

Formulas for calculating results

Conversion of mass to volume

V = (w + e) x Z

V = volume (µl)
w = weight (mg)
e = evaporation loss (mg)
Z = conversion factor for mg/µl conversion

Evaporation loss can be significant with low volumes. To determine mass loss, dispense water to the weighing vessel, note the reading and start a stopwatch. See how much the reading decreases during 30 seconds (e.g. 6mg = 0.2mg/s).

Compare this to the pipetting time from tareing to reading. Typically pipetting time might be 10 seconds and the mass loss is 2 mg (10s x 0.2mg/s) in this example. If an evaporation trap or lid on the vessel is used the correction of evaporation is usually unnecessary.
The factor Z is for converting the weight of the water to volume at test temperature and pressure. A typical value is 1.0032µl/mg at 22°C and 95 kPa. See the conversion table on page 62.

Accuracy (systematic error)

Accuracy is the difference between the dispensed volume and the selected volume of a pipette.

$\mathbf{A = \overline{V} - V_0}$

A = accuracy
$\overline{V}$ = mean volume
V_0 = nominal volume

Accuracy can be expressed as a relative value:

$\mathbf{A\% = 100\% \times A / V_0}$

Precision (random error)

Precision refers to the repeatability of the pipettings. It is expressed as standard deviation (s) or coefficient of variation (cv)

$$S = \sqrt{\frac{\sum_{i=1}^{n} (V_i - \overline{V})^2}{n-1}}$$

s = standards deviation
$\overline{V}$ = mean volume
n = number of measurements

Standard deviation can be expressed as a relative value (CV)

CV = 100% x S / $\overline{V}$

Maintenance

When the Finnpipette Novus is not in use, make sure it is stored in an upright position. We recommend a Finnpipette stand for this purpose.
The part # refer to exploded views beginning at page 63.

Daily checking

The pipette should be checked at the beginning of each day for dust and dirt on the outside surfaces of the pipette. Particular attention should be paid to the tip cone. No other solvents except 70 % ethanol should be used to clean the pipette.

Short-term Service

If the pipette is used daily it should be checked and lubricated every three months. The servicing procedure starts with choosing the Service-mode from the menu (Menu -> Options -> Service).

1. Note that the tip ejector button is in fully up position.
2. Pull down the tip ejector part of the module and remove the tip cone module by pulling it out (snap fitting).
3. Pull out the Colour Ring 15. Open the upper end of the tip ejector slightly and remove the tip ejector. Pull out the module spring and clip 22.
4. Use a screwdriver to remove the four/six screws in the module cover and lift off the cover.
5. Remove the piston bar and clean the pistons and tip cones with a dry nap–free cloth.
6. If needed, replace the o-rings as described in Long-term Service
7. Grease cleaned pistons with the lubricant provided in the pipette package.
8. Install the piston bar with pistons and tip cones in the cover and close the cover with the four/six screws. Insert the clip 22.
9. Place the tip ejector and module spring on the neck of the module. Press the spring below the tip ejector. Close the tip ejector with the Colour Ring.
10. Push the tip cone module back to the handle while holding the ejector down, until you hear a “click”.
11. Press trigger to reconnect the piston to drive mechanism.
12. Press READY to return from service mode.

Long-term service

If the pipette is used daily it should be serviced every six months. The servicing procedure starts with the disassembly of the pipette. The servicing procedure starts with choosing the Service-mode from the menu (Menu -> Options -> Service).

1. Note that the tip ejector button is in fully up position.
2. Pull down the tip ejector part of the module and remove the tip cone module by pulling it out (snap fitting).
3. Pull out the Colour Ring 15. Open the upper end of the tip ejector slightly and remove the tip ejector. Pull out the module spring and clip 22.
4. Use a screwdriver to remove the four/six screws in the module cover and lift off the cover.
5. Remove the piston bar and clean the pistons and tip cones with a dry nap–free cloth.
6. **100-1200 µl:** Pull out the tip cones from the pistons. Clean the cylinders 30, pistons and seal rings. If the seal ring is damaged, the whole piston assembly 31 must be replaced. Grease the seal rings and cylinders, avoid using too much lubricant. Install the cylinders back on the pistons.

30-300 µl & 5-50 µl: Open the tip cone by carefully releasing the cover ring from its snap joint with the screwdriver. Remove all the parts from the tip cone. Clean all the parts. If needed, replace the o-rings Take one piston. Slide cover ring 32 (larger hole), spring 33, support ring 35, (o–ring 37 bigger 5-50µl) and o–ring 36 (smaller) onto the piston. Grease the o–ring with the lubricant provided in the pipette package. Slide all the parts into the tip cone and close the snap joint of the cover ring.

1–10 µl: Open the tip cone by carefully releasing the cover ring from its snap joint with the screwdriver. Remove all the parts from the tip cone. Clean all the parts. If needed, replace the o-rings Take one piston. Slide cover ring 32 (larger hole), support 35, o–ring 36 (bigger), o–ring 37 (smaller) and o–ring support 38 onto the piston. Then slide spring 39, spring support 40 (sharp edges first) and o–ring 41 onto the o–ring sup port 38. Grease the o–rings with the lubricant provided in the pipette package. Slide all the parts into the tip cone and close the snap joint of the cover ring.

7. Install the piston bar with pistons and tip cones in the cover and close the cover with the four/six screws. Insert the clip 22.
8. Place the tip ejector and module spring on the neck of the module. Press the spring below the tip ejector. Close the tip ejector with the Colour Ring.
9. Push the tip cone module back to the handle while holding the ejector down, until you hear a “click”.
10. Press trigger to reconnect the piston to drive mechanism.
11. Press READY to return from service mode.

Service Instructions for Multichannel Pipette Tip Cones

To ensure even performance between all channels in a multichannel pipette, all tip cones have to be changed at the same time, if any of them needs to be changed. Don’t mix tip cones of different packages, because one bag contains a matched set of tip cones.

Sterilization

The tip cone module can be sterilized by autoclaving it at 121°C The tip cone module can be sterilized by autoclaving it at 121°C (252°F) for 20 minutes. You can use steam sterilization bags if needed.

Note: The 1200 µl module is NOT autoclavable.

Remove and attach the module back to the pipette as described in Maintenance section. After autoclaving the module must be cooled to room temperature for at least two hours. Before pipetting, make sure that the module is dry. We recommend that you check the calibration after every sterilization cycle.

CAUTION!

The Finnpipette is designed to allow easy in-lab service. If you would prefer to have us or your local representative service your pipette, please make sure that the pipette has been decontaminated before you send it to us.
Please note that the postal authorities in your country may prohibit or restrict the shipment of contaminated material by mail.

Trouble shooting

The table below lists possible problems and their solutions.

Defect	***Possible reason***	***Solution***
Leakage	*Tip incorrectly attached*	*Attach firmly*
	Foreign particles between tip and tip cone	*Clean tip cones attach new tips*
	Foreign particles between the piston, the O-ring and the cylinder	*Clean and grease O-ring and cylinder.*
	Insufficient amount of grease on cylinder and O-ring	*Grease accordingly*
	O-ring damaged	*Change the O-ring*
Inaccurate dispensing	*Incorrect operation*	*Follow instructions carefully*
	Tip incorrectly attached	*Attach firmly*
	Calibration altered: caused by misuse, for example	*Recalibrate according to instructions*
Inaccurate dispensing with certain liquids	*Unsuitable calibration High viscosity liquids may require recalibration*	*Recalibrate with the liquids in question*
No dispensing	*Pistons stuck or not connected*	*Remove tip cone module. Move piston by hand or with piston removal tool. Attach the module in service mode.*

Conversion table

Value of the conversion factor Z (µl/mg), as a function of temperature and pressure, for distilled water.

Umrechnungstabelle

Wert des Umrechnungsfaktors Z (µl/mg) als eine Funktion von Temperatur und Druck für destilliertes Wasser.

Table de conversion

Valeur du facteur de conversion Z (µl/mg), comme fonction de la température et de la pression, pour de l'eau distillée.

Tabla de conversiones

Valor del factor de conversión Z (µl/mg), como función de temperatura y presión, para el agua destilada.

変換係数表

変換係数 Z（µl/mg）は温度と気圧の関数になります。蒸留水の場合の値を表に示します。

Temperature °C	***Air pressure hPA (mbar)***					
	800	*853*	*907*	*960*	*1013*	*1067*
15	*1.0018*	*1.0018*	*1.0019*	*1.0019*	*1.0020*	*1.0020*
15.5	*1.0018*	*1.0018*	*1.0019*	*1.0020*	*1.0020*	*1.0021*
16	*1.0019*	*1.0020*	*1.0020*	*1.0021*	*1.0021*	*1.0022*
16.5	*1.0020*	*1.0020*	*1.0021*	*1.0022*	*1.0022*	*1.0023*
17	*1.0021*	*1.0021*	*1.0022*	*1.0022*	*1.0023*	*1.0023*
17.5	*1.0022*	*1.0022*	*1.0023*	*1.0023*	*1.0024*	*1.0024*
18	*1.0022*	*1.0023*	*1.0024*	*1.0024*	*1.0025*	*1.0025*
18.5	*1.0023*	*1.0024*	*1.0025*	*1.0025*	*1.0026*	*1.0026*
19	*1.0024*	*1.0025*	*1.0025*	*1.0026*	*1.0027*	*1.0027*
19.5	*1.0025*	*1.0026*	*1.0026*	*1.0027*	*1.0028*	*1.0028*
20	*1.0026*	*1.0027*	*1.0027*	*1.0028*	*1.0029*	*1.0029*
20.5	*1.0027*	*1.0028*	*1.0028*	*1.0029*	*1.0030*	*1.0030*
21	*1.0028*	*1.0029*	*1.0030*	*1.0030*	*1.0031*	*1.0031*
21.5	*1.0030*	*1.0030*	*1.0031*	*1.0031*	*1.0032*	*1.0032*
22	*1.0031*	*1.0031*	*1.0032*	*1.0032*	*1.0033*	*1.0033*
22.5	*1.0032*	*1.0032*	*1.0033*	*1.0033*	*1.0034*	*1.0035*
23	*1.0033*	*1.0033*	*1.0034*	*1.0035*	*1.0035*	*1.0036*
23.5	*1.0034*	*1.0035*	*1.0035*	*1.0036*	*1.0036*	*1.0037*
24	*1.0035*	*1.0036*	*1.0036*	*1.0037*	*1.0038*	*1.0038*
24.5	*1.0037*	*1.0037*	*1.0038*	*1.0038*	*1.0039*	*1.0039*
25	*1.0038*	*1.0038*	*1.0039*	*1.0039*	*1.0040*	*1.0041*
25.5	*1.0039*	*1.0040*	*1.0040*	*1.0041*	*1.0041*	*1.0042*
26	*1.0040*	*1.0041*	*1.0042*	*1.0042*	*1.0043*	*1.0043*
26.5	*1.0042*	*1.0042*	*1.0043*	*1.0043*	*1.0044*	*1.0045*
27	*1.0043*	*1.0044*	*1.0044*	*1.0045*	*1.0045*	*1.0046*
27.5	*1.0044*	*1.0045*	*1.0046*	*1.0046*	*1.0047*	*1.0047*
28	*1.0046*	*1.0046*	*1.0047*	*1.0048*	*1.0048*	*1.0049*
28.5	*1.0047*	*1.0048*	*1.0048*	*1.0049*	*1.0050*	*1.0050*
29	*1.0049*	*1.0049*	*1.0050*	*1.0050*	*1.0051*	*1.0052*
29.5	*1.0050*	*1.0051*	*1.0051*	*1.0052*	*1.0052*	*1.0053*
30	*1.0052*	*1.0052*	*1.0053*	*1.0053*	*1.0054*	*1.0055*

Spare parts
Ersatzteile
Pieces detachees
Piezas de recambio
部品及び付属品

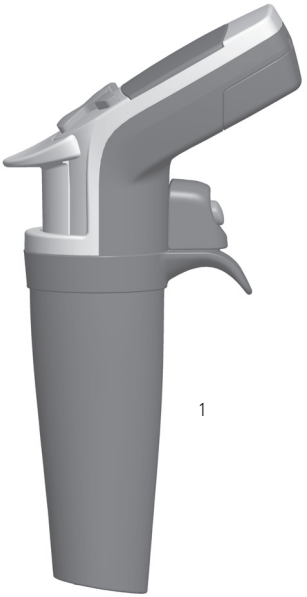

8-channel

14. 1062470
15. 1062460
16. 1062450
17. 1062380
18. 1062390
19. 1132470
21. 4x0202040
22. 1132490
23. 2x1062400
24. 2x1061300

12-channel

14. 1062470
15. 1062460
16. 1062440
17. 1062420
18. 1062410
19. 1132480
20. 2x0202020
21. 4x0202040
22. 1132500
23. 2x1062430
24. 3x1061300

16-channel

1. 2209790
14. 1062470
15. 1062460
16. 1062450
17. 1062380
18. 1062390
19. 1132470
21. 4x0202040
22. 1132490
23. 2x1062401
24. 10593800
30. 10593810
31. 2x11072010
32. 10593840
33. 2x1132130
34. 1132150
35. 2x10593500
36. 2x1030170
37. 10593870
42. 2207050 **1 pcs**
42. 2207950 **8 pcs**

1-10µl

1. 2209760
30. 10593240
31. 2209870
32. 1061020
34. 1131630
35. 10593280
36. 1030380
37. 1033160
38. 10593290
39. 1131900
40. 10593360
41. 1030170
42. 2208860
42. 2209100 **8 pcs**
42. 2209110 **12 pcs**

5-50µl

1. 2209770
30. 10589520
31. 2208880
32. 1061020
33. 1131400
34. 1131630
35. 10589500
36. 1030480
37. 1030160
42. 2208850
42. 2209080 **8 pcs**
42. 2209090 **12 pcs**

30-300µl

1. 2209780
30. 1062770
31. 10589170
32. 1061020
33. 1131400
34. 1131630
35. 10589510
36. 1030140
42. 2209890
42. 2209900 **8 pcs**
42. 2209910 **12 pcs**

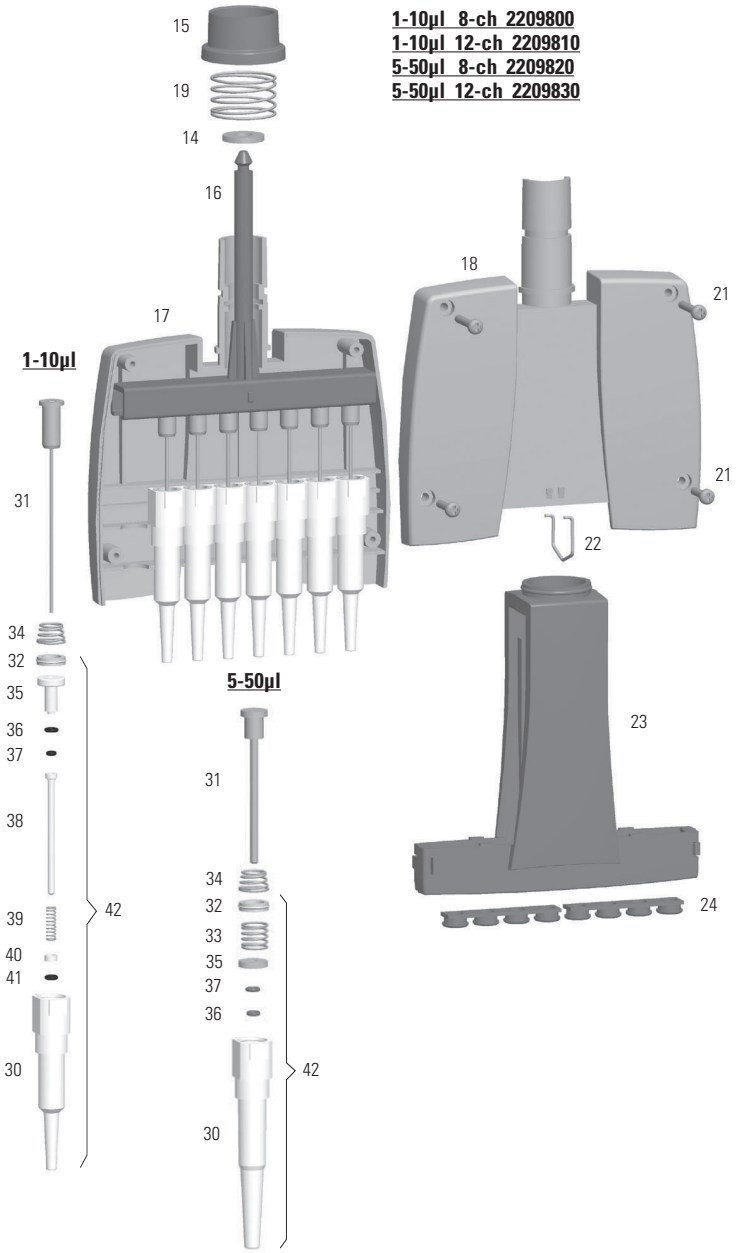
1-10µl 8-ch 2209800
1-10µl 12-ch 2209810
5-50µl 8-ch 2209820
5-50µl 12-ch 2209830
15
19
14
16
17
18
21
21
22
23
24
1-10µl
31
34
32
35
36
37
38
39
40
41
30
42
5-50µl
31
34
32
33
35
37
36
30
42

30-300µl 8-ch 2209840
30-300µl 12-ch 2209850

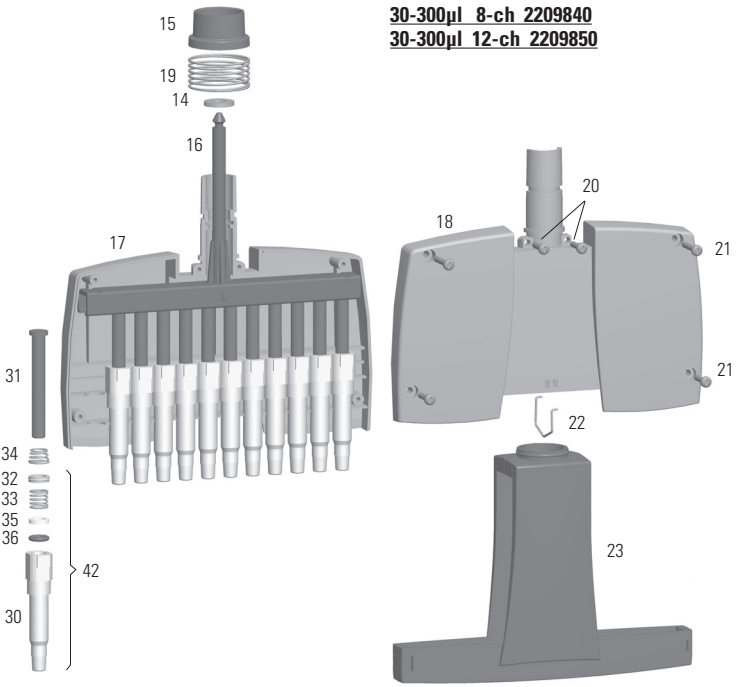

5-50µl 16-ch 2209860

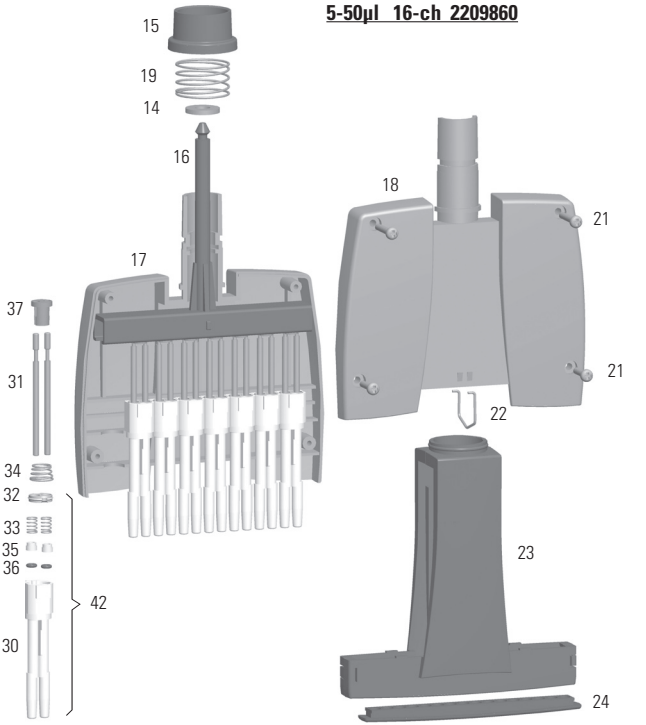

1200µl 8-ch 2209930

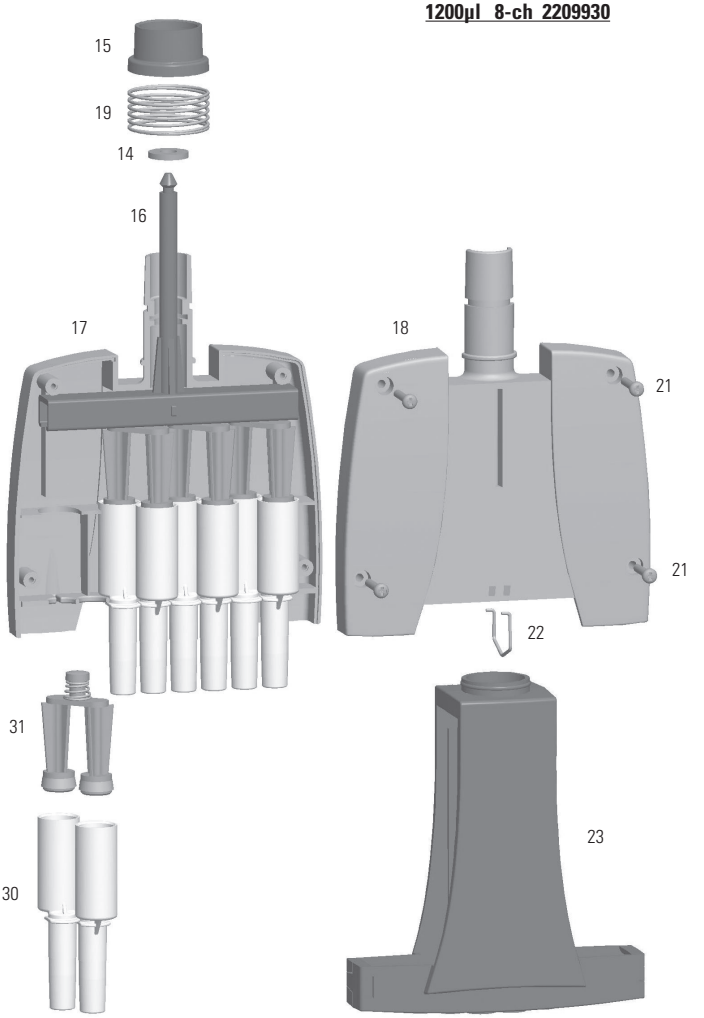

1200 µl 8-channel

1. 2209940
14. 1062470
15. 1062460
16. 1062780
17. 1062750
18. 1062740
19. 1132480
21. 4x0202040
22. 1132630
23. 2x1062760
30. 1062720
31. 2209920

Tip Ordering Information
Bestellinformation: Pipettenspitzen
Renseignements pour commander des cônes
Información para pedidos de puntas
チップの注文について

Code	Finntip	Volume	Qty
9400310	10	0,2-10 µl	1000/bag
9400300	10	0,2-10 µl	10x96/rack
9400360	50	0,2-50 µl	1000/bag
9400370	50	0,2-50 µl	10x384/rack
9400130	200 Ext	5-200 µl	10x96/rack
9400260	250 Univ.	0,5-250 µl	10x96/rack
9401250	300	5-300 µl	10x96/rack
94060510	Flex 300	0.5-300 µl	10x96/rack
9401070	1000	100-1000 µl	200/box
9401110	1000	100-1000 µl	10x96/rack
94060810	Flex 1200	100-1200 µl	10x96/rack
9402070	5 ml	1-5 ml	5x54/rack
9402160	10 ml	2-10 ml	5x24/rack

10 ml | 5 ml | 1000 | 300 | 250 Universal | 50 | 10 | 200 Ext