Finnpipette® COLOUR FIXED VOLUME

INSTRUCTIONS FOR USE

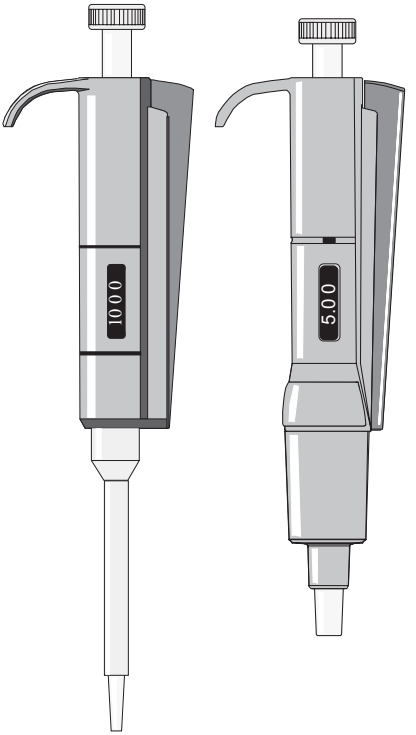

Thermo
ELECTRON CORPORATION

Thermo Electron Oy
P.O.Box 100, Fin-01621 Vantaa, Finland
Tel. +358-9-329 100, fax -358-9-3291 0414
www.thermo.com/finnpipette

PRODUCT DESCRIPTION

The FINNPIPETTE COLOUR FIXED VOLUME is a general purpose micropipette for sampling and dispensing accurate amounts of liquids. It operates on an air displacement principle (i.e. an air interface) and uses detachable, disposable tips.
FINNPIPETTE COLOUR FIXED VOLUME pipettes cover a volume range of 5-5000 µl. All models are equipped with a built-in tip ejector.

RAW MATERIALS

The FINNPIPETTE COLOUR FIXED VOLUME is made of mechanically durable and chemically resistant materials.

DESCRIPTION OF TIPS

Finntips are recommended for use with the FINNPIPETTE COLOUR FIXED VOLUME.
They are made of natural coloured polypropylene, generally regarded as the only contamination free material suitable for tips.
Finntips are also autoclavable (121°C).

DIGITAL DISPLAY (Fig.1)

The adjusted delivery volume is clearly indicated by a digital display on the pipette handle.

PIPETTE OPERATION

The operation is controlled by the push button. For best possible accuracy:

Operate the push button slowly and with steady speed at all times, especially when working with liquids of high viscosity.
Never let the push button snap back.
Make sure the Finntip is firmly attached to the tip cone of the pipette and that there are no foreign particles inside the tip itself.
Wet a newly attached tip with the solution being pipetted before any actual pipetting takes place.
This is done by filling and emptying the tip 2-3 times.
Hold the pipette vertically during intake of the solution.
The temperature of the tip and pipette should be equalized to that of the solution.
For maximum hand comfort hold the pipette lightly in your hand with the grippy resting over your index finger.

PIPETTING TECHNIQUES

FIGURES 2-5:

A = READY POSITION
B = FIRST STOP
C = SECOND STOP

FORWARD TECHNIQUE (Fig.2)

1. Depress the operating button to the first stop.
2. Immerse the tip slightly about 1 cm below the surface of the solution and release the operating button slowly.
The tip has been filled.
Withdraw the tip from the solution. Wipe any drops from the outside of the tip without touching the orifice.
This can done by touching the side of the vessel while withdrawing the tip.
3. Deliver the liquid by gently depressing the operating button to the first stop.
Then after a delay of about one second, continue to depress the operating button all the way down to the second stop.
The tip has been emptied. Drop formation is avoided by touching the side of the vessel with the tip. Withdraw the tip.
4. Release the operating button to the ready position.

If necessary, change the tip and continue with the pipetting.

REVERSE TECHNIQUE (Fig.3)

The reverse technique is suitable for pipetting solutions with high viscosity and/or solutions that tend to foam easily.
This technique is also recommended for pipetting very small volumes.

1. Depress the operating button all the way down to the second stop.
2. Immerse the tip slightly about 1 cm below the surface of the solution and release the operating button slowly.
The tip has now been filled. Withdraw the tip from the solution with the tip sliding along the vessel wall.
3. Deliver the liquid by gently depressing the operating button to the first stop.
The tip has now been emptied.
Drop formation is avoided by touching the side of the vessel with the tip. Withdraw the tip.
Some liquid will remain inside the tip and should not be included in the delivery.
4. The remaining liquid is discarded with the tip or pipetted back into its original container.

REPETITIVE TECHNIQUE (Fig.4)

The repetitive technique offers a rapid and simple procedure for repeated delivery of the same liquid with the same volume.

1. Depress the operating button all the way down to the second stop.
2. Immerse the tip slightly about 1 cm below the surface of the solution and release the operating button slowly.
The tip has now been filled.
Withdraw the tip from the solution with the tip sliding along the vessel wall to avoid drops.
3. Deliver the liquid by gently depressing the operating button to the first stop.
The desired volume has now been delivered.
Hold the operating button to the first stop.
Some liquid will remain inside the tip and should not be included in the delivery. Drops outside the tip should be included in the delivery.
4. Immerse the tip slightly below the surface of the solution and release the operating button slowly.
The tip has been refilled.
5. Continue repeating procedures 3 and 4.

PIPETTING WHOLE BLOOD (Fig.5)

(e.g. deproteinization in blood glucose determination)
Use forward technique procedures 1 and 2 to fill the tip with blood.Wipe the tip carefully with a dry clean tissue.

1. Immerse the tip into the reagent and depress the push button to the first stop, making sure the tip is well below thesurface.
2. Release the push button slowly to the ready position
The tip has been filled with reagent.
Do not lift the tip out of the solution.
3. Depress the push button to the first stop and release slowly.
Keep repeating this procedure until the interior wall of the tip is clear.
4. Finally, depress the push button all the way to the second stop to completely empty the tip.

TIP EJECTION (Fig.6)

Direct the pipette towards a suitable waste receptacle and press the tip ejector pusher with your thumb thus disposing the tip safely.

MAINTENANCE

SHORT TERM CHECKING

The pipette should be checked at the beginning of each day for any dust or dirt on the outside surfaces of the pipette.
Particular attention should be paid to the tip cone.
Solvents should not be used for cleaning the pipette.

LONG TERM MAINTENANCE 1-1000µl (Fig.7)

The piston and the cylinder should be checked at least twice a year if the pipette is in daily use.
Opening the pipette **(Fig.7)**

1. Depress the tip ejector pusher.
2. Insert the tooth of the tool into the opening at the base of the tip ejector pusher.
3. Pull away the tip ejector shaft and tip ejector pusher.
4. Remove the tip cone by turning it in a counterclockwise direction with the tool provided in the package.
5. Pull out the piston.
6. Remove the O-ring from the tip cone.
7. Clean the piston, the piston spring and the O-ring with a dry, napless cloth.
8. Check the cylinder for foreign particles. Please note that the cylinder must not be greased.
9. Grease the cleaned parts with lubricant.
10. Reassemble the parts.

LONG TERM MAINTENANCE 1-5ml (Fig.9)

If the pipette is used daily it should be checked every three months. The servicing procedure starts by disassembling of the pipette.

1. Insert the tooth of the service tool into the opening at the base of the tip ejector pusher.
2. Pull away the tip ejector and tip ejector pusher.
3. Remove the cover.
4. Remove the cylinder by pressing with maintenance pliers.**(Fig.10,11)**
5. Pull out the piston.
6. Remove the O-ring from the piston.
7. Clean the piston, the piston spring and the O-ring with a dry napless cloth.
8. Check the cylinder for foreign particles.
9. Grease the cleaned parts with lubricant provided in the package.
10. Reassemble the parts.
11. Check the calibration according to instructions.

CALIBRATION

All Finnpipettes are factory calibrated and adjusted to give the volumes as specified with distilled or deionized water. Normally, the pipettes do not need adjustment, but they are constructed to permit recalibration **(Fig.8)** and adjustment for liquids of different temperature and viscosity.

DEVICE REQUIREMENTS AND TEST CONDITIONS

An analytical balance must be used. The scale graduation value of the balance should be chosen according to the selected test volume of the pipette:

Volume range	readable graduation
under 10 µl	0.001 mg
10-100 µl	0.01 mg
above 100 µl	0.1 mg

Test liquid: Water, distilled or deionized, “grade 3” water conforming ISO 3696. Tests are done in a draft-free room at a constant (±0.5°C) temperature of water, pipette and air between 20°C to 25°C.
The relative humidity must be above 55%. Especially with volumes under 50µl the air humidity should be as high as possible to reduce the effect of evaporation loss. Special accessories, such as the evaporation trap, are recommended.

CHECKING THE CALIBRATION

A new tip is first pre-wetted 3-5 times and a series of ten pipettings are done.
A pipette is always adjusted for delivery (Ex) of the selected volume. Measuring volumes taken from balance is not allowed. If the calculated result are in the limits, the calibration of the pipette is correct.

Procedure:

1. Pre-wet the tip 3-5 times
2. Do 10 pipettings.
3. Calculate the accuracy (A) and precision (cv) of the series.
4. Compare the results to the limits in the Table 1.

If the results are in the limits of Table 1, then the calibration of the pipette is correct. Otherwise the pipette must be adjusted and checked again.

Volume	Accuracy		Precision	
µl	µl	%	s.d.* µl	cv%
1	±0.04	±4.0	0.04	4.0
2	±0.05	±2.5	0.04	2.0
5	±0.07	±1.4	0.07	1.4
10	±0.09	±0.9	0.08	0.8
20	±0.12	±0.6	0.10	0.5
25	±0.15	±0.6	0.13	0.5
50	±0.3	±0.6	0.2	0.4
100	±0.4	±0.4	0.3	0.3
200	±0.8	±0.4	0.6	0.3
250	±1.0	±0.4	0.8	0.3
500	±1.5	±0.3	1.5	0.3
1000	±3.0	±0.3	0.3	0.3
2000	±6.0	±0.3	4.0	0.2
3000	±9.0	±0.3	6.0	0.2
5000	±15.0	±0.3	10.0	0.2

ADJUSTMENT

Adjustment is done with the service tool.

1. Place the service tool into the openings of the calibration nut at the top of the handle.
2. Turn the service tool clockwise to increase, or counterclockwise to decrease the volume.
3. After adjustment check the calibration according to the instructions above.

FORMULAS FOR CALCULATING RESULTS

Conversion of mass to volume

V = (w + e) x Z

V = volume (µl)
w = weight (mg)
e = evaporation loss (mg)
Z = conversion factor for mg/µl conversion

Evaporation loss can be significant with low volumes. To determine mass loss, dispense water to the weighing vessel, note the reading and start a stopwatch.
See how much the reading decreases during 30 seconds (e.g. 6 mg = 0.2 mg/s). Compare this to the pipetting time from tareing to reading. Typically pipetting time might be 10 seconds and the mass loss is 2 mg (10s x 0.2mg/s) in this example. If an evaporation trap or lid on the vessel is used the correction of evaporation is usually unnecessary.

The factor Z is for converting the weight of the water to volume at test temperature and pressure. A typical value is 1.0032 µl/mg at 22°C and 95 kPa. See the conversion table on page 10.

Accuracy (systematic error)

Accuracy is the difference between the dispensed volume and the selected volume of a pipette.

$\mathbf{A = \bar{V} - V_0}$

A = accuracy
$\bar{V}$ = mean volume
V_0 = nominal volume

Accuracy can be expressed as a relative value:

$\mathbf{A\% = 100\% \times A / V_0}$

Precision (random error)

Precision refers to the repeatability of the pipettings. It is expressed as standard deviation (s) or coefficient of variation (cv)

$$S = \sqrt{\frac{\sum_{i=1}^{n} (V_i - \bar{V})^2}{n-1}}$$

s = standards deviation
$\bar{v}$ = mean volume
n = number of measurements
cv is the relative value of standard deviation.
cv = 100% x s / $\bar{v}$

PACKAGE

The FINNPIPETTE COLOUR FIXED VOLUME is shipped in a custom made, cardboard package. The package contains the following items:

1. The pipette
2. Service tool
3. Sample of Finntip
4. Tube grease
5. Instruction Manual

CAUTION!

The Finnpipette is designed to allow easy in-lab service. If you, however, want to send the pipette to us or to our local representative for service, please enclose a list of any infectious, radioactive or otherwise hazardous materials that have been pipetted. Also please note that the postal authorities in your country may limit the sending of contaminated material by mail.

TROUBLE SHOOTING

The accompanying table is a guide to possible problems and their solutions.

Defect	Possible reason	Solution
Leakage	Tip incorrectly attached	Attach firmly
	Foreign bodies between tip and tip cone	Clean tip cones attach new tips
	Foreign bodies between the piston, the O-ring housed in the cylinder	Clean and grease O-ring and piston accordingly. Use grease
	Insufficient grease on piston and O-ring	Grease accordingly
	O-ring bent or damaged	Change the O-ring
Inaccuracies	Incorrect operation	Follow instructions carefully
	Tip incorrectly attached	Attach firmly
	Calibration altered: caused e.g. by misuse	Recalibrate according to instructions
Inaccuracy with certain liquids	Unsuitable calibration. High viscosity liquids may require recalibration.	Recalibrate with the liquids in question.

CONVERSION TABLE

Value of the conversion factor Z (µl/mg), as a function of temperature and pressure, for distilled water.

Temperature °C	Air pressure hPA (mbar)					
	800	853	907	960	1013	1067
15	1.0018	1.0018	1.0019	1.0019	1.0020	1.0020
15.5	1.0018	1.0018	1.0019	1.0020	1.0020	1.0021
16	1.0019	1.0020	1.0020	1.0021	1.0021	1.0022
16.5	1.0020	1.0020	1.0021	1.0022	1.0022	1.0023
17	1.0021	1.0021	1.0022	1.0022	1.0023	1.0023
17.5	1.0022	1.0022	1.0023	1.0023	1.0024	1.0024
18	1.0022	1.0023	1.0024	1.0024	1.0025	1.0025
18.5	1.0023	1.0024	1.0025	1.0025	1.0026	1.0026
19	1.0024	1.0025	1.0025	1.0026	1.0027	1.0027
19.5	1.0025	1.0026	1.0026	1.0027	1.0028	1.0028
20	1.0026	1.0027	1.0027	1.0028	1.0029	1.0029
20.5	1.0027	1.0028	1.0028	1.0029	1.0030	1.0030
21	1.0028	1.0029	1.0030	1.0030	1.0031	1.0031
21.5	1.0030	1.0030	1.0031	1.0031	1.0032	1.0032
22	1.0031	1.0031	1.0032	1.0032	1.0033	1.0033
22.5	1.0032	1.0032	1.0033	1.0033	1.0034	1.0035
23	1.0033	1.0033	1.0034	1.0035	1.0035	1.0036
23.5	1.0034	1.0035	1.0035	1.0036	1.0036	1.0037
24	1.0035	1.0036	1.0036	1.0037	1.0038	1.0038
24.5	1.0037	1.0037	1.0038	1.0038	1.0039	1.0039
25	1.0038	1.0038	1.0039	1.0039	1.0040	1.0041
25.5	1.0039	1.0040	1.0040	1.0041	1.0041	1.0042
26	1.0040	1.0041	1.0042	1.0042	1.0043	1.0043
26.5	1.0042	1.0042	1.0043	1.0043	1.0044	1.0045
27	1.0043	1.0044	1.0044	1.0045	1.0045	1.0046
27.5	1.0044	1.0045	1.0046	1.0046	1.0047	1.0047
28	1.0046	1.0046	1.0047	1.0048	1.0048	1.0049
28.5	1.0047	1.0048	1.0048	1.0049	1.0050	1.0050
29	1.0049	1.0049	1.0050	1.0050	1.0051	1.0052
29.5	1.0050	1.0051	1.0051	1.0052	1.0052	1.0053
30	1.0052	1.0052	1.0053	1.0053	1.0054	1.0055

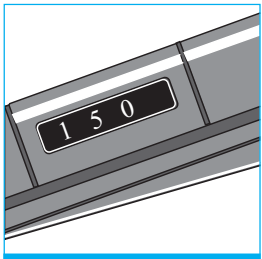

1

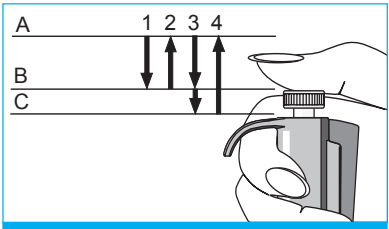

2

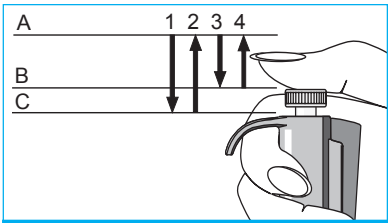

3

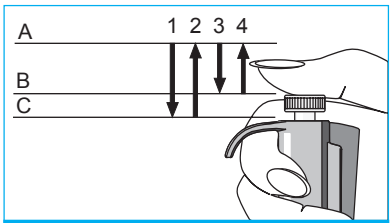

4

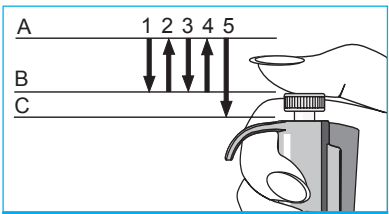

5

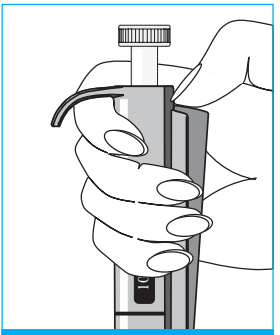

6

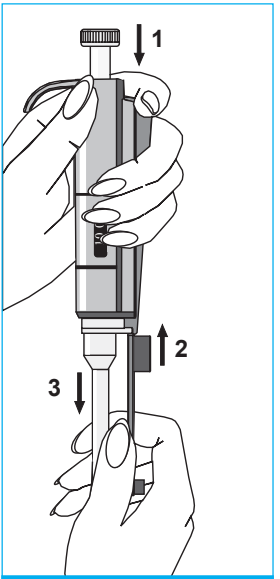

7

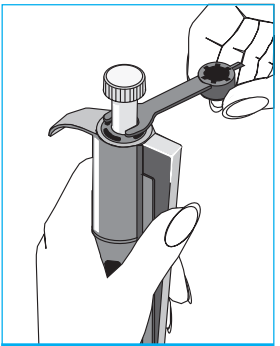

8

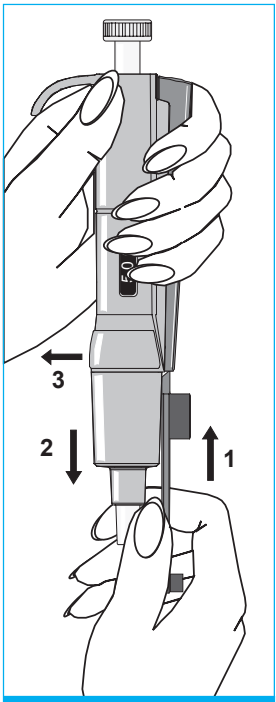

9

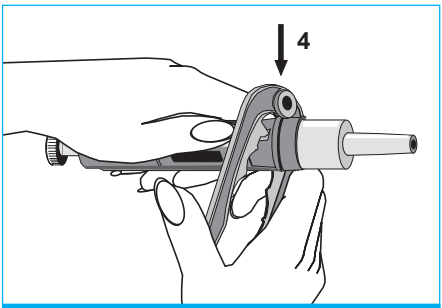

10

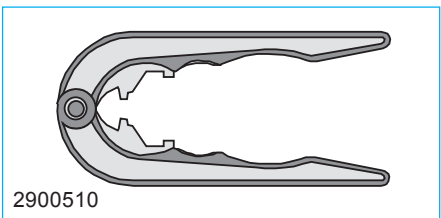

11

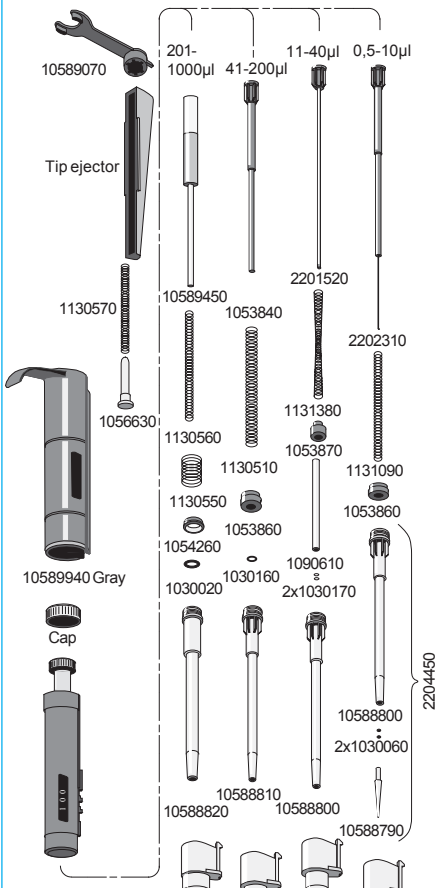

2204780	5 µl
2204790	10 µl
2204800	20 µl
2204810	25 µl
2204820	50 µl
2204830	100 µl
2204820	200 µl
2204840	250 µl
2204850	500 µl
2204870	1000 µl

SPARE PARTS 5-1000µl

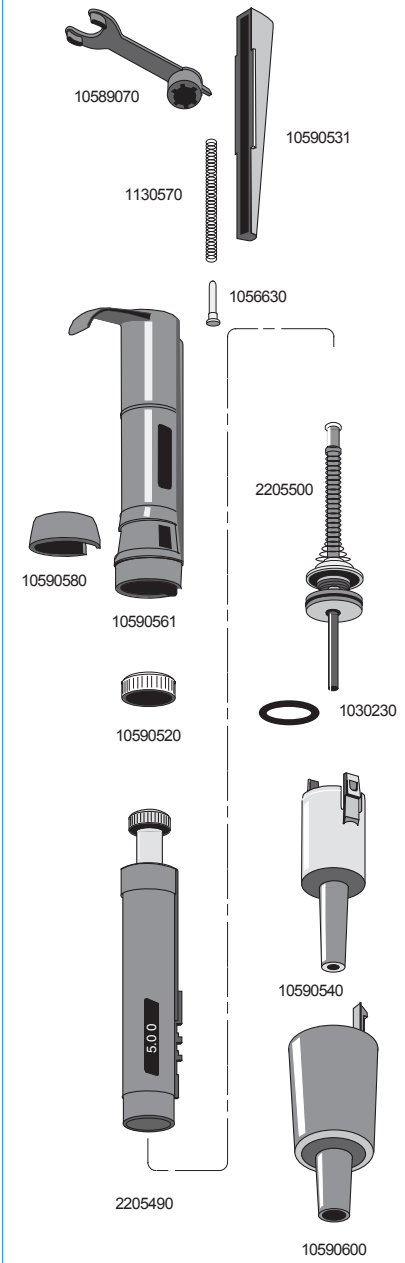

SPARE PARTS 1-5 ml

TIP ORDERING INFORMATION

Code	Finntip	Volume	Qty
9400310	10	0,2 - 10 µl	1000/bag
9400300	10	0,2 - 10 µl	10x96/rack
9400130	200 Ext	5 - 200 µl	10x96/rack
9400260	250 Univ.	0,5 - 300 µl	10x96/rack
9401250	300	5 -300 µl	10x96/rack
9401070	1000	100 -1000 µl	200/box
9401110	1000	100 -1000 µl	10x96/rack
9402060	5 ml	1-5 ml	5x24/rack
9402160	10 ml	2-10 ml	5x24/rack

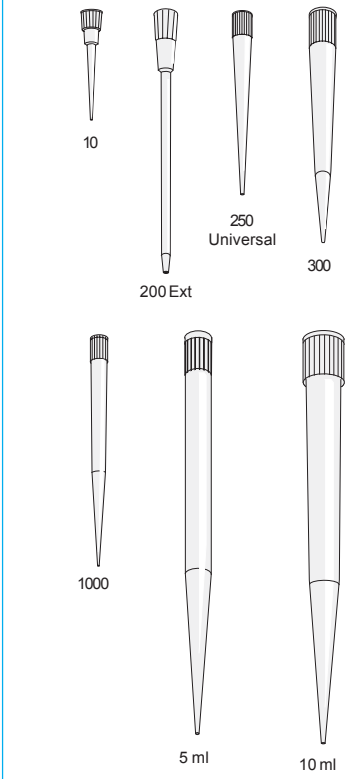

TIPS

Product specifications are subject to change without prior notice. Finpipette® and Finntip® are registered trademarks of Thermo Electron Oy.

1505260-05